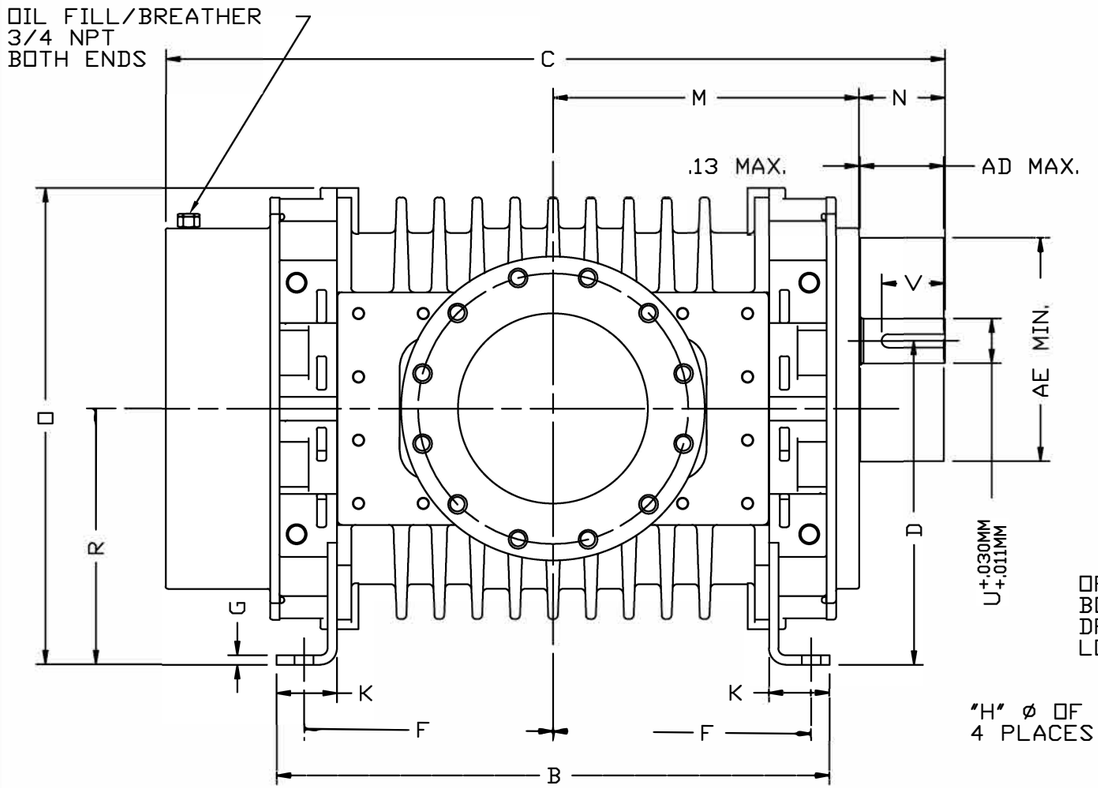

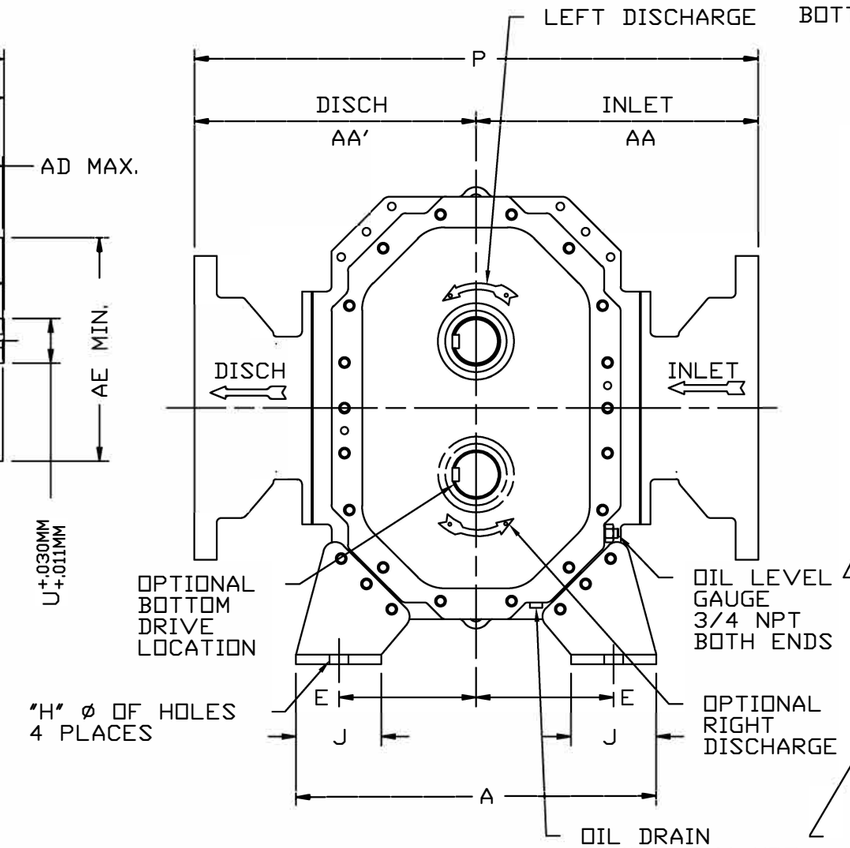

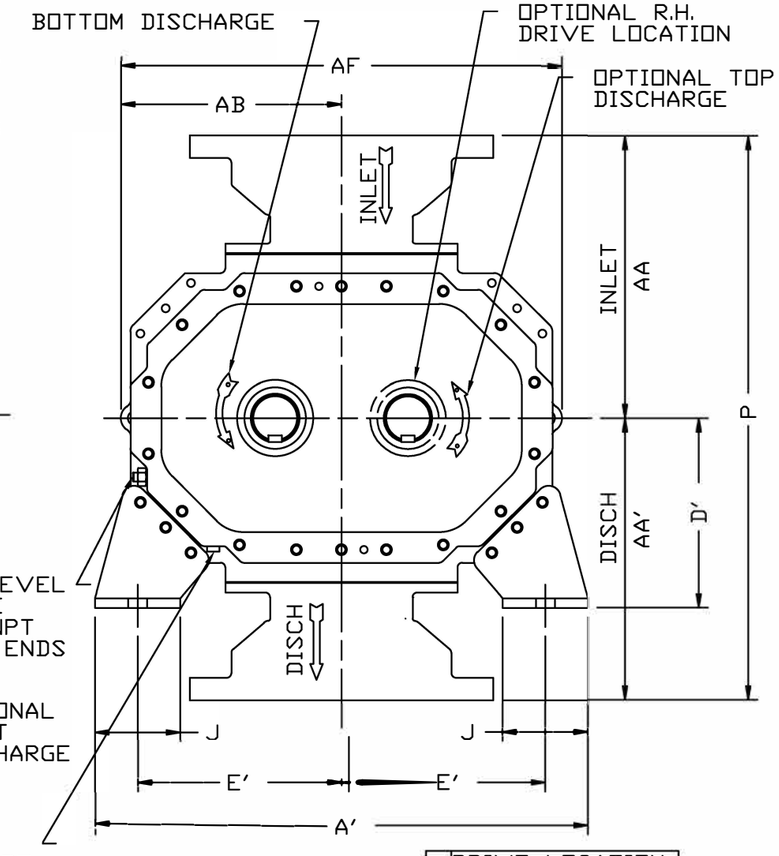

INLET & DISCHARGE FLANGES TO MATE FLUSH & SQUARE WITH FLAT FACE FLANGE ONLY. USE FULL FACE GASKETS.

V-BELT DRIVEN UNITS: MOTOR TO BE LOCATED ON INLET SIDE OF BLOWER.

AD - MAXIMUM SHEAVE WIDTH
(SEE OVERHUNG LOAD LIMIT K-24102)

AE - MINIMUM SHEAVE DIAMETER
(SEE OVERHUNG LOAD LIMIT K-24102)

ALL DIMENSIONS IN INCHES UNLESS OTHERWISE SPECIFIED
METRIC DIMENSIONAL #92518021

TOMLIN Equipment Co.

INDUSTRIAL EQUIPMENT • MAJOR STOCKING DISTRIBUTOR
ENGINEERING • SALES • SERVICE • PARTS
242 POPLAR STREET • P.O. BOX 8053 • TOLEDO, OH 43605 • (419) 691-3571 • FAX (419) 691-1928
5091 WEST 164TH STREET • CLEVELAND, OHIO 44142 • (216) 265-0666 • FAX (216) 265-0667
1-800-882-1992 (OHIO TOLL FREE) 1-855-691-0621 (MICHIGAN TOLL FREE)
www.tomlinequip.com

ANSI FLANGE DIMENSIONS						
	FA	FB	FC	FD	FE	FG
10 FLG	10.00	14.25	16.00	12	.88-9	1.19
12 FLG	12.00	17.00	19.00	12	.88-9	1.25

FA - FLANGE OPENING
FB - FLANGE BOLT CIRCLE
FC - FLANGE O.D.
FD - No. TAPPED HOLES
FE - SIZE OF TAPPED HOLES
FG - DEPTH OF TAP

	DRIVE LOCATION	
	LH	RH
DISCH. LOCATION TOP	CW	CCW
DISCH. LOCATION BOTTOM	CCW	CW

UNIT IS BUILT TO CUSTOMERS SPECIFIED ORIENTATION

MODEL	A	A'	B	C	D	D'	E	E'	F	G	H	J	K	M	N	O	P	R	U MM	V MM	KEYWAY MM	INLET AA	DISCH AA'	AB	AD	AE	AF	FLANGE SIZE	APPROX WEIGHT
722	19.00	26.00	28.79	41.17	17.00	10.00	7.25	10.75	13.27	.50	1.00	4.50	3.00	16.14	4.56	25.13	29.75	13.5	60.00	76.20	18.0X7.0	14.87	14.87	11.63	4.43	11.80	23.26	10"	1485 LBS
728	"	"	34.54	46.92	"	"	"	"	16.14	"	"	"	"	19.01	"	"	31.88	"	"	"	"	15.94	15.94	"	"	"	"	12"	1805 LBS

CERTIFIED CORRECT FOR
CUSTOMER ORDER No. _____
ROOTS ORDER No. _____
DATE _____

	REVISIONS	BY	CHANGE NOTICE	CHKD.	APP.
D	UPDATE TO HOWDEN, TRI-RAM BRAND	MPM	16849V		MNM
C	REF FLANGE HOLES TO STRADDLE C/L		11895V		
B	REV OF DIM "F"		11471H		
A	ORACLE CONVERSION				

V-BELT DRIVE DATA
BELTS
DRIVE SHEAVE
DRIVEN SHEAVE
CENTER DISTANCE

TRI-RAM™

TRI-LOBE BLOWERS MODELS 722 & 728

ROOTS™

DR	CHKD	APP	92517021	REV. D

PRINTED IN U.S.A.