No. REQ'D.	PART NAME	PATT. No. PART No.	MAT'L.

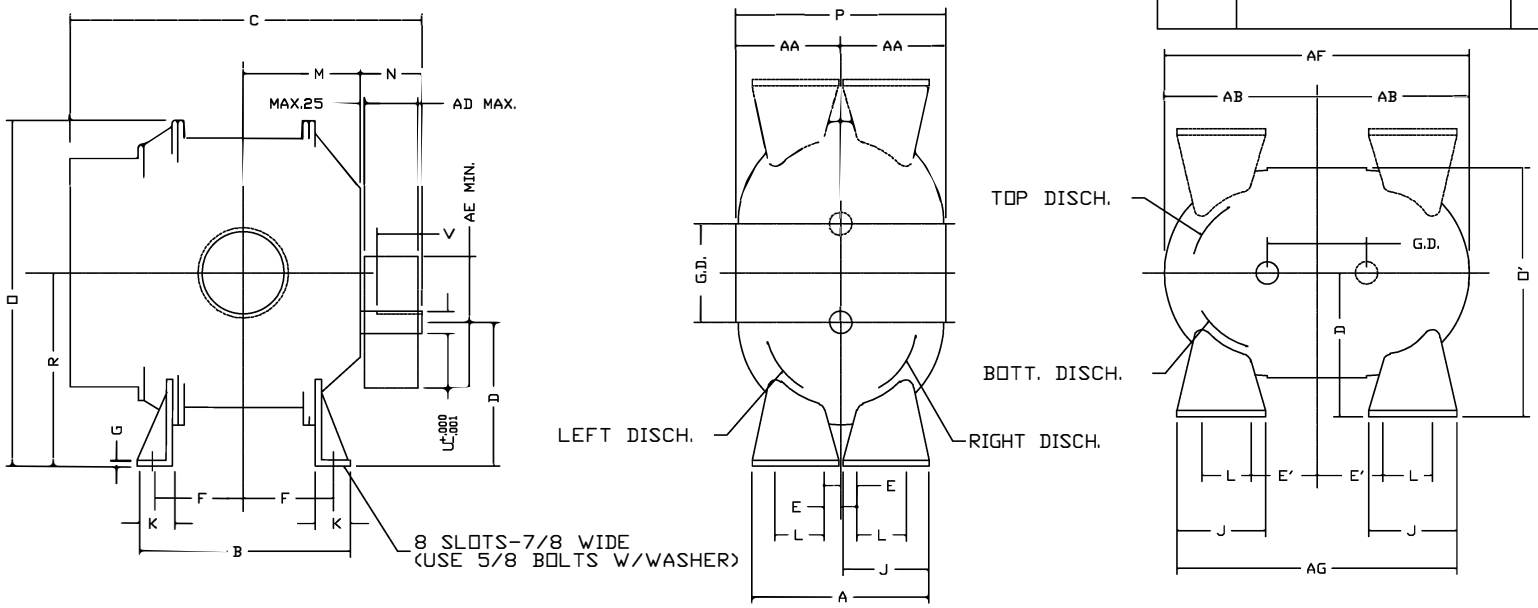

	6"FLG	8"FLG
OPENING	6.00	8.00
BOLT CIRCLE	9.50	11.75
FLANGE O.D.	11.00	13.50
NO. TAPPED HOLES	8	8
SIZE HOLES	3/4-10	3/4-10
TAP DEPTH	1.13	1.13

UNIT SIZE	APPROX. OIL CAP. VERT.	APPROX. OIL CAP. HORIZ.	G.D.
6"	28.3 FL OZ	52.1 FL OZ	6.00
7"	32.3 FL OZ	59.5 FL OZ	7.00

W-INLET
W'-DISCHARGE
AD-SHEAVE WIDTH
AE-SHEAVE DIA.
ALL DIM. IN INCHES

FRAME SIZE	A	B	C	D	E	E'	F	G	J	K	L	M	N	O	O'	P	R	U	V	KEYWAY	W	W'	AA	AB	AD	AE	AF	AG	APPROX WEIGHT
65	11.00	10.00	18.38	8.75	1.00	4.00	3.81	.38	5.38	2.13	3.00	5.63	3.56	21.63	15.13	12.75	11.75	1.375	2.75	.312x.156	3"NPT	3"NPT	6.38	9.88	3.44	8.00	19.75	17.00	245 LBS
68	"	13.00	21.38	"	"	"	5.81	"	"	"	"	7.13	3.69	"	"	"	"	"	"	"	5"NPT	5"NPT	"	"	"	"	"	"	285 LBS
615	"	20.00	28.38	"	"	"	8.81	"	"	"	"	10.63	"	"	16.25	15.00	"	"	"	"	6"FLG	6"FLG	7.50	"	"	"	"	"	425 LBS

TOMLIN Equipment Co.
Since 1948
INDUSTRIAL EQUIPMENT • MAJOR STOCKING DISTRIBUTOR
ENGINEERING • SALES • SERVICE • PARTS
242 POPLAR STREET • P.O. BOX 8053 • TOLEDO, OH 43605 • (419) 691-3571 • FAX (419) 691-1928
5091 WEST 164TH STREET • CLEVELAND, OHIO 44142 • (216) 265-0666 • FAX (216) 265-0667
1-800-882-1992 (OHIO TOLL FREE) 1-855-691-0621 (MICHIGAN TOLL FREE)
www.tomlinequip.com

MFG. REF.

DO NOT SCALE FOR DIMENSIONS
ALL DIMENSIONS SHOWN IN BRACKETS ( ) ARE MILLIMETERS

ORDER No.

CONFIDENTIAL

THIS DOCUMENT CONTAINS CONFIDENTIAL INFORMATION OF ROOTS DIVISION, DRESSER INDUSTRIES, INC. IT SHALL BE HELD IN STRICTEST CONFIDENCE, AND BE USED ONLY IN CONJUNCTION WITH ROOTS DIVISION BUSINESS.

REF: EP938
- FLATNESS
- ANGULARITY
- PARALLELISM
- TRUE POSITION
- STRAIGHTNESS
- CONCENTRICITY
- PERPENDICULARITY
- PROFILE OF LINE
- PROFILE OF A SURFACE
- DIAMETER
- FINISH IN MICRO INCHES

	REVISIONS	BY	DATE	CHANGE NOTICE	CHKD.	APP
G	REF "F" DIM ON 68	RDR		6459V		
F	BOLTS CLARIFIED	DB				

DATE
DR.
CHKD.
APP.
DBV
SCALE
CAD FILE / DIRECTORY

UNIVERSAL
RAI BLOWER

Howden

DIMENSIONAL TOLERANCES UNLESS OTHERWISE SPECIFIED
FINISHED DIMENSIONS
TWO PLACE DECIMALS (.XX)—±.015 FRACTIONAL—±1/64
THREE PLACE DECIMALS (.XXX)—±.005

62753021

REV G

F:\ FILE\ FORM\ BSIZE.GCM